OUTLINE DIMENSIONS

MODEL	MX317WDD
UNIT	mm
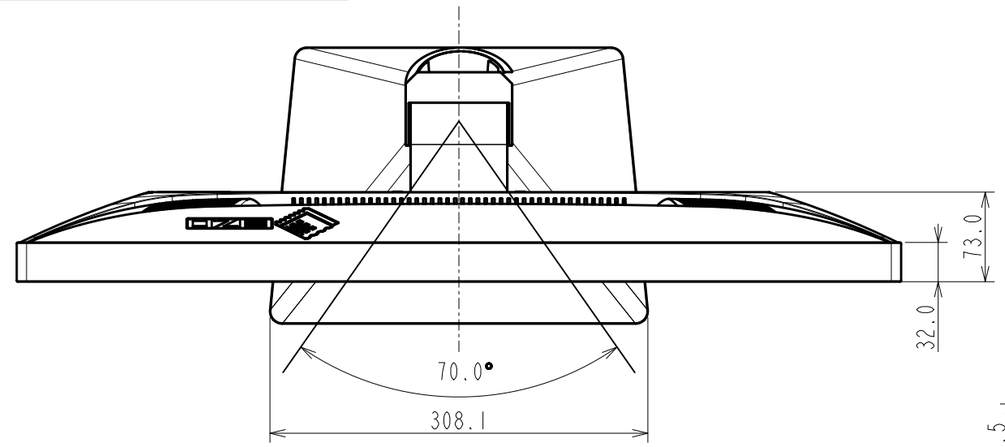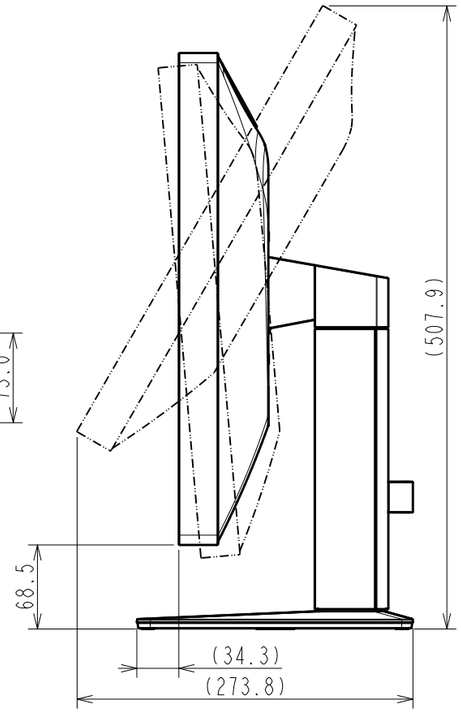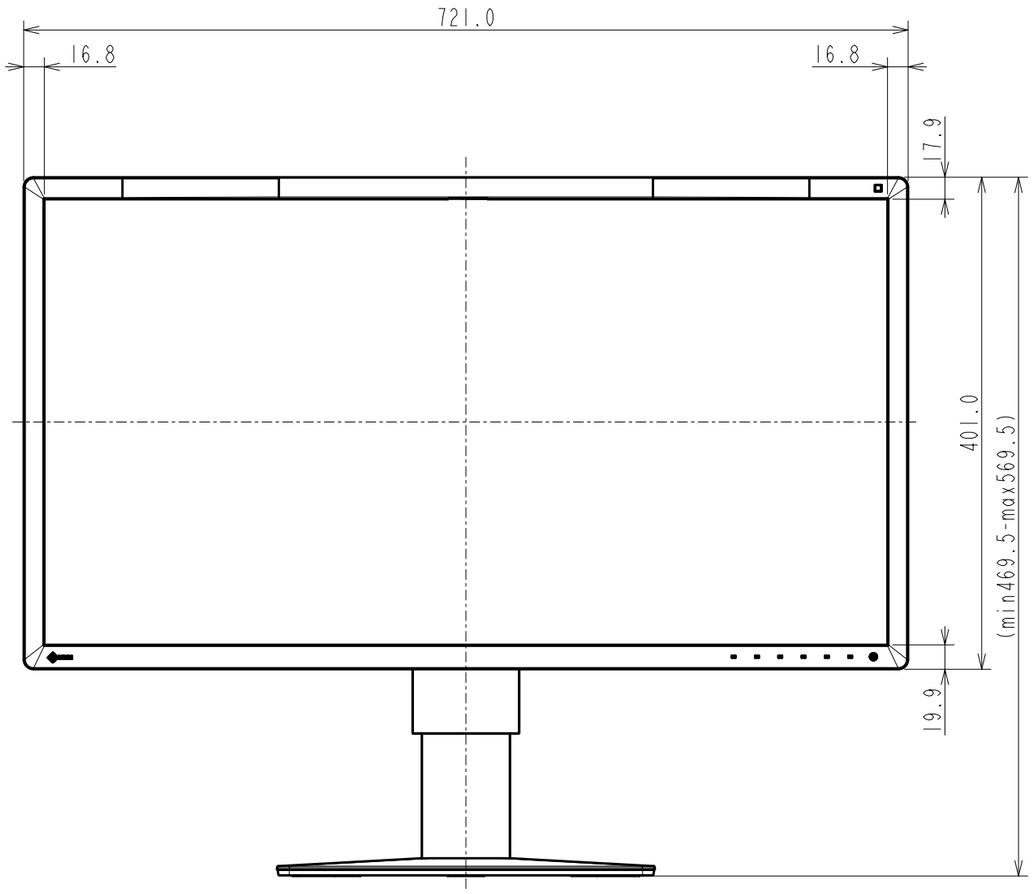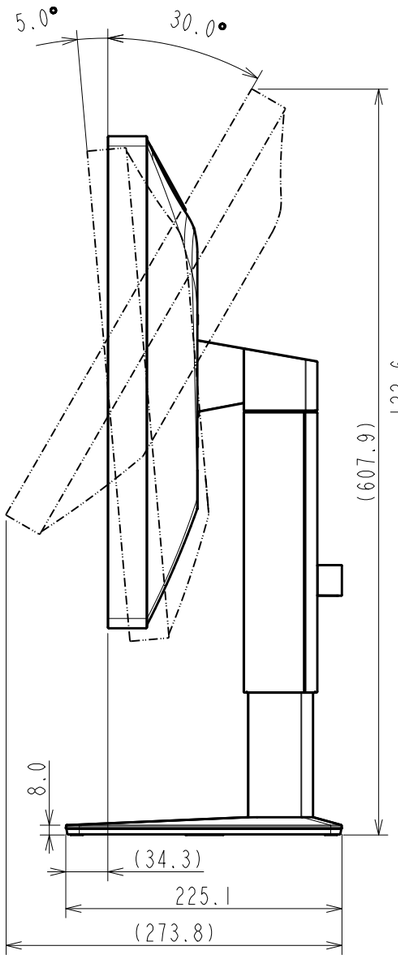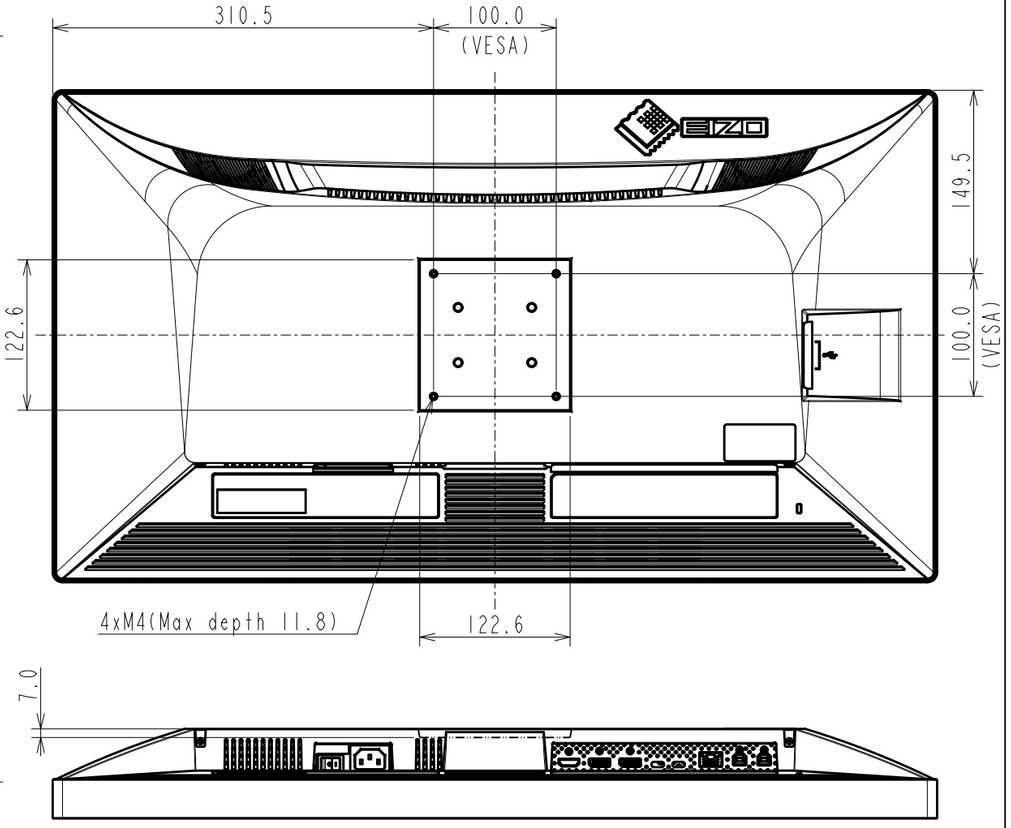
EIZO Corporation