OUTLINE DIMENSIONS

MODEL	FDF2307W
UNIT	mm
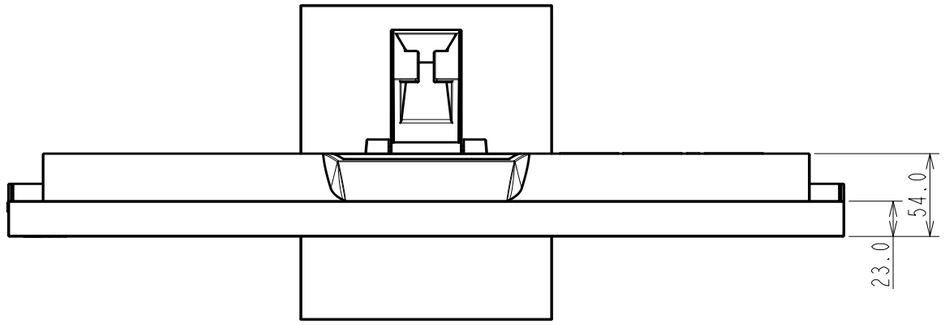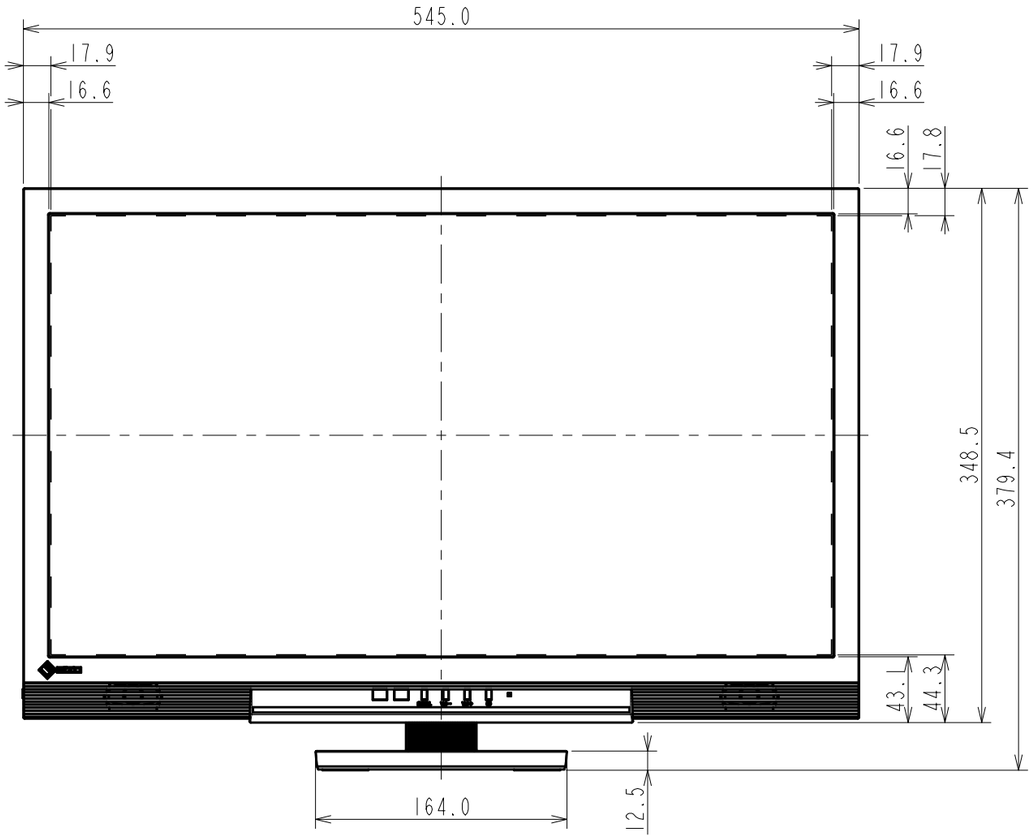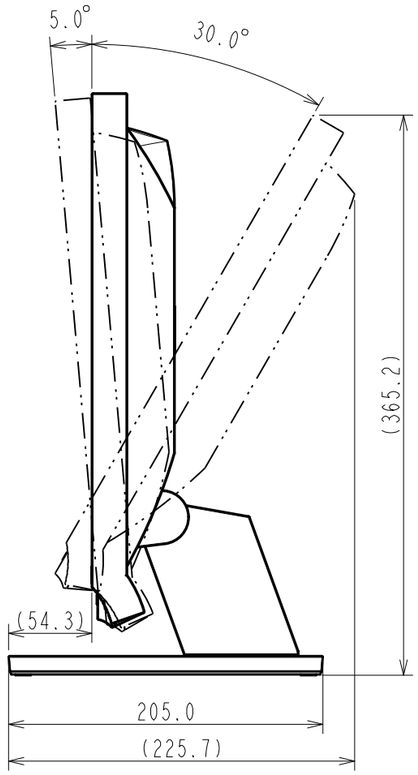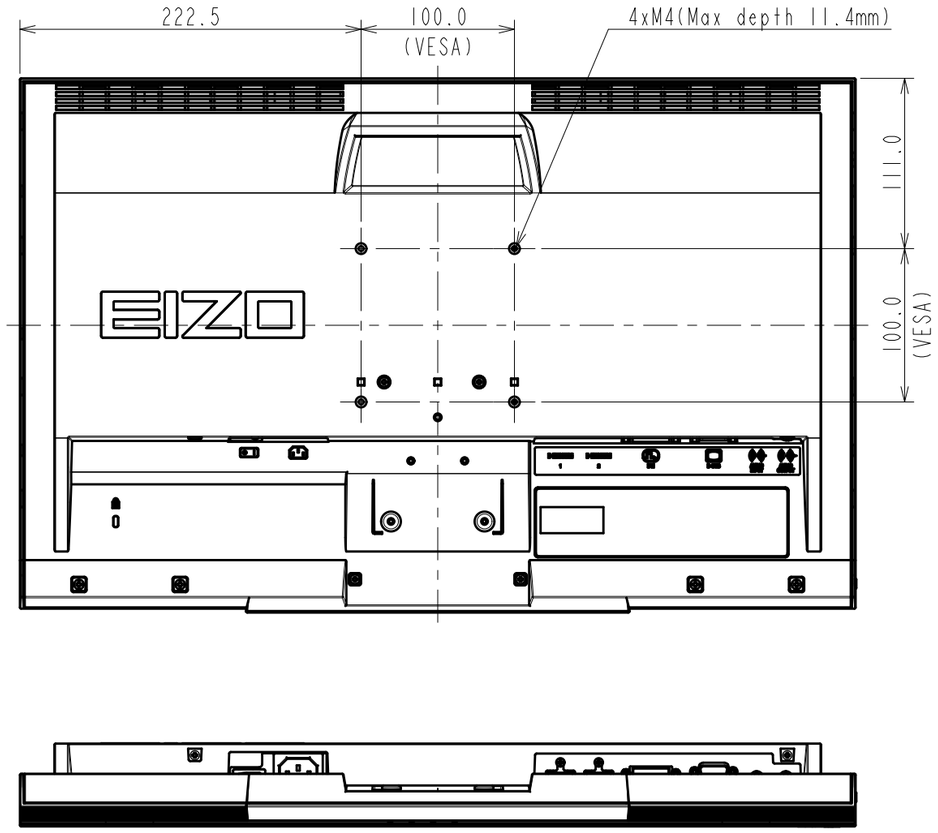
EIZO Corporation