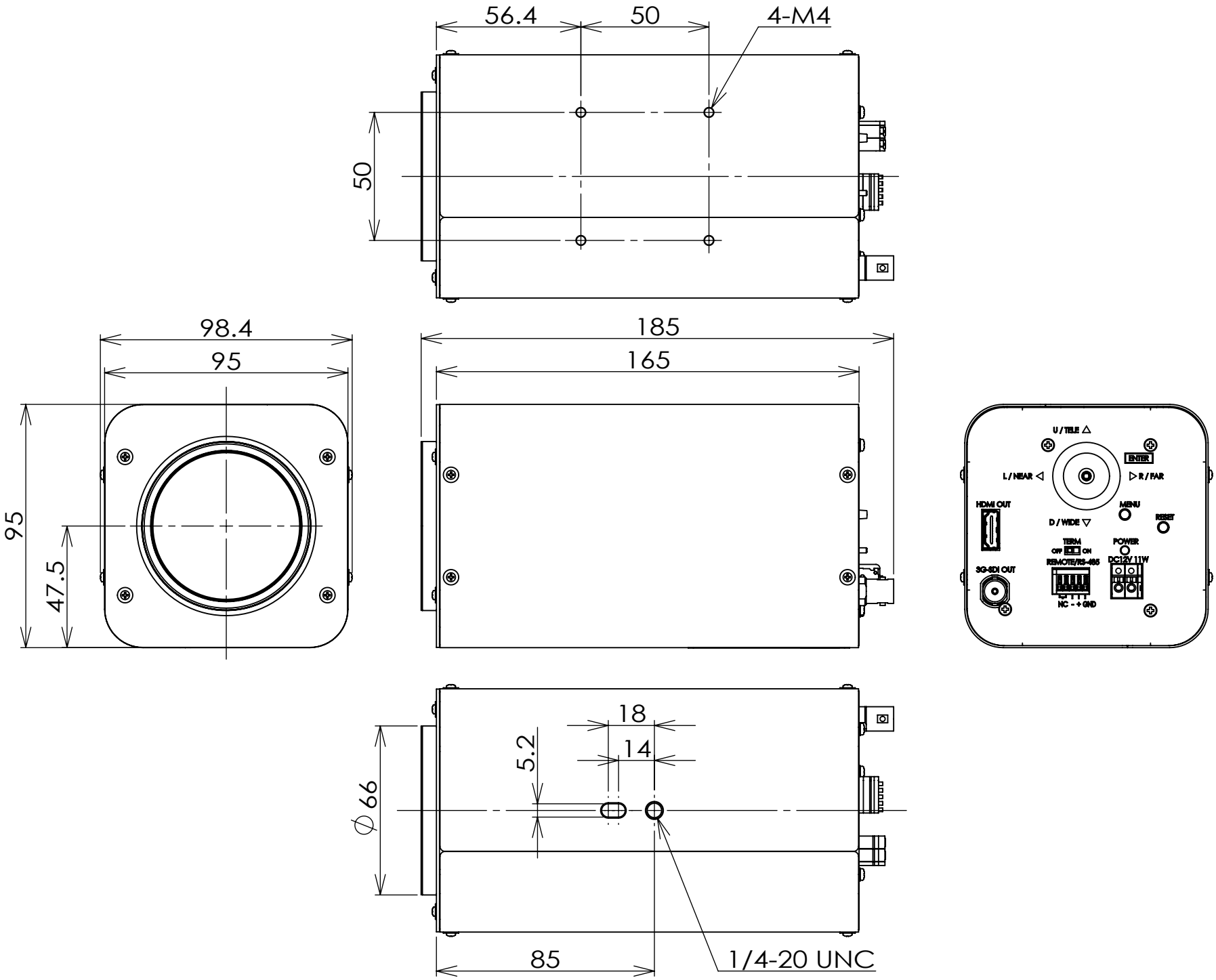
56.4
50
4-M4
50
98.4
95
95
47.5
185
165
U / TELE
ENTER
L / NEAR
R / FAR
HDMI OUT
MENU
RESET
D / WIDE
TERM
OFF ON
POWER
REMOTE/RS-485
DC12V 11W
3G-SDI OUT
NC - + GND
18
14
5.2
Ø66
85
1/4-20 UNC